NRSE Series

SMD Shielded Tiny Power Inductor
Size 3012

CHARACTERISTICS

-
-

APPLICATION

-
-

Dimensions: [mm]

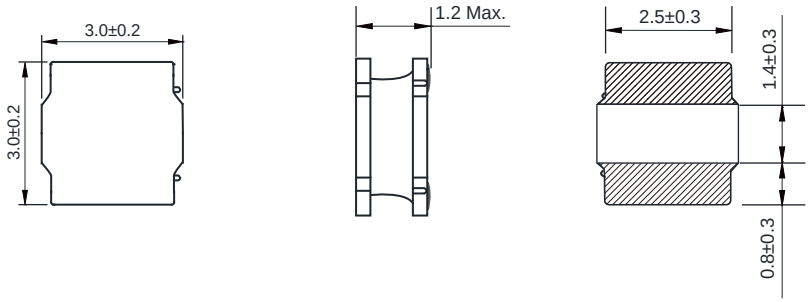

Land Pattern: [mm]

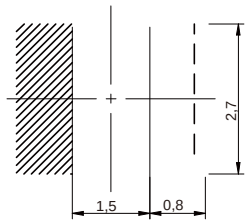

Electrical Properties:

	Inductance @100KHz/0.25V		Current	Temperature Rise Current	DCR ±30%

℃ ℃

℃

KOHER Electronic
4546 BATES DRIVE, YORBLINDA CA 92886 USA
714-325-4789 Contact@kohergroup.com